REVISIONS		
ISS	ZONE	DESCRIPTION\PER REQUEST\DATE
B	A-1	NO.5 WAS CHANGED\RD-DM88090201B\09-02-99'
C	A-1	NO.2 WAS CHANGED\RD-DM89062302C\06-23-00'
C1	A-1	NO.4 WAS CHANGED\N/A\07-17-01'

SALES

ISSUED
2001. 8. 03
R & D

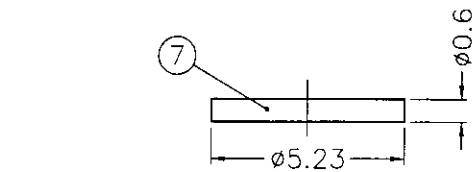

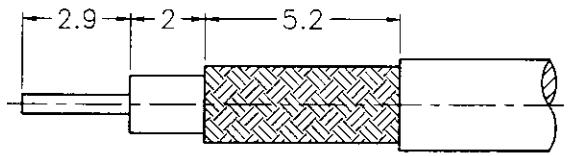

RECOMMENDED
CABLE STRIPPING DIM'S
(建議剝線尺寸)

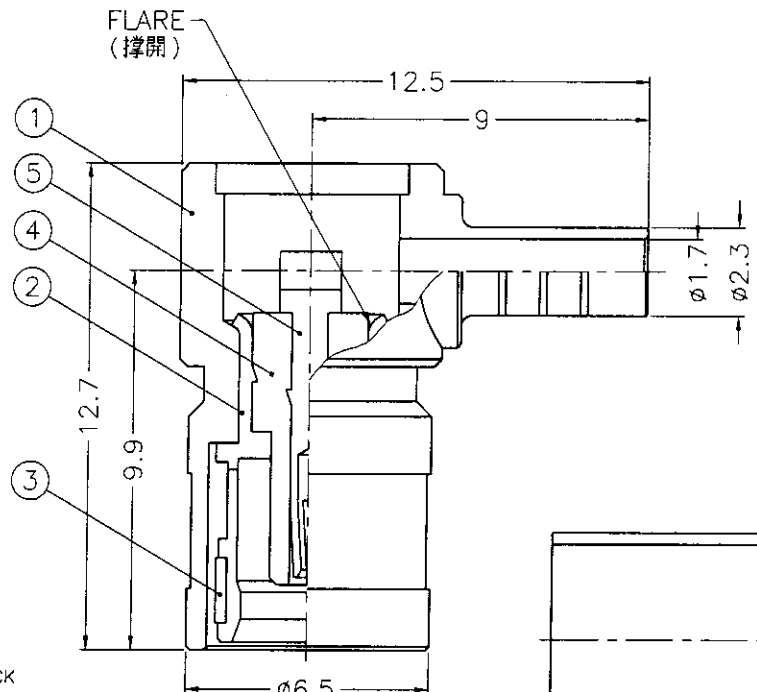

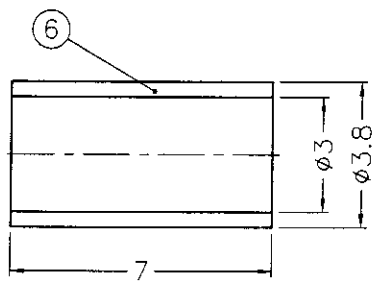

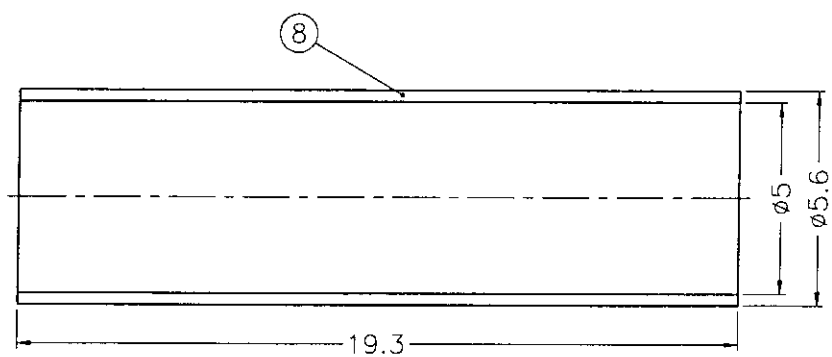

NOTES: FINISH (PLATING THICKNESS IN MICRO-INCHES)
1. BRASS PER QQ-B-626
2. BRASS PER QQ-B-613
3. NICKEL PL. 100 MIN. THICK OVER COPPER STRIKE
4. NICKEL PL. 100 MIN. THICK OVER COPPER PL. 300 MIN. THICK
5. BERYLLIUM COPPER PER QQ-C-530
6. GOLD PL. 30 MIN. THICK OVER NICKEL PL. 100 MIN. THICK OVER COPPER STRIKE
7. TEFLON MIL-P-19468

1. CRIMPED FERRULE
HEX CRIMP SIZE .128"
2. CONTACT PIN TO SOLDER

NO.	DESCRIPTION	MATERIAL	FINISH	Q'TY	DRAWING NO.
8	HEAT SHRINK TUBING			1	HT-56/5X193
7	COVER	NOTE 2	NOTE 3	1	CV-523X06-T
6	FERRULE	COPPER	NOTE 3	1	FR-38/3X7C
5	CONTACT PIN	NOTE 5	NOTE 6	1	SM85091-5-B
4	INSULATOR	NOTE 7	NATURAL	1	SMB5003-3T-50
3	RETAINER RING	NOTE 5	NATURAL	1	SMB5000-6
2	BODY	NOTE 1	NOTE 3	1	SMB6112D1-2-C
1	HOUSING	DIECAST	NOTE 4	1	SMB6112D1-1-23/17

DIMENSIONS ARE IN MILLIMETERS

UNLESS OTHERWISE SPECIFIED TOLERANCES
0.5-6 = ±0.2
6-30 = ±0.4
30-120 = ±0.6
120-315 = ±1
315-1000 = ±1.6
1000-2000 = ±2.4

SCALE	5/1	ISSUE	C1

PART NO.

APPROVED Jack. C DATE 07-17-01'
CHECKED Andy. C DATE 07-17-01'
DRAWN Joyce. Y DATE 07-17-01'

Amphenol - Kai Jack
TAINAN TAIWAN

TITLE
SMB R/A CRIMP PLUG
(FOR RG-174/U,188A/U,316/U)

DRAWING NO.
KJ-SMB6112D1-NT30G-316U-50

FILE NO. F:\DWG\SMB\6112D1\316U-50\NT30G

RD-DR17582