REVISIONS		
ISS	ZONE	DESCRIPTION\PER REQUEST\DATE

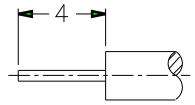

RECOMMENDED
CABLE STRIPPING DIM'S

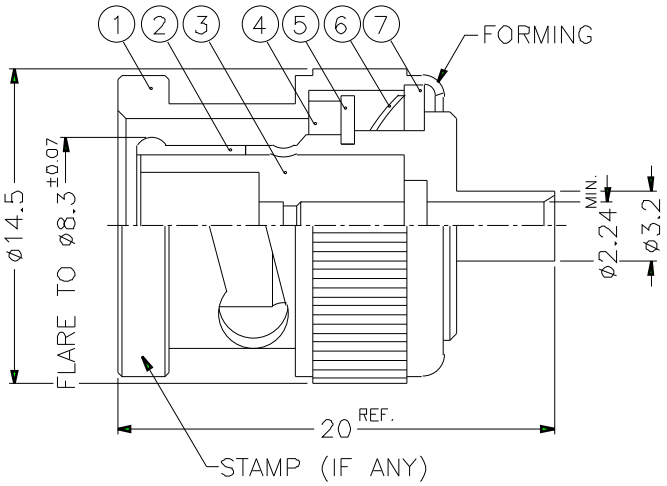

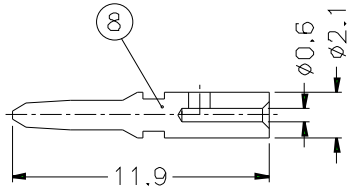

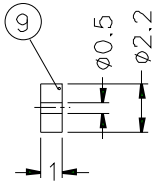

NOTES: FINISH (PLATING THICKNESS IN MICRO-INCHES)
1. BRASS PER QQ-B-626
2. BRASS PER QQ-B-613
3 NICKEL PL. 100 MIN. THICK OVER COPPER STRIKE
4 NICKEL PL. 200 MIN. THICK OVER COPPER STRIKE
5. GOLD PL. 3 MIN. THICK OVER NICKEL PL. 100 MIN. THICK OVER COPPER STRIKE
6 TEFLON MIL-P-19468

1. CRIMPED CONTACT PIN
HEX CRIMP SIZE .068"

NO.	DESCRIPTION	MATERIAL	FINISH	Q'TY	DRAWING NO.
9	INSULATOR	NOTE 6	NATURAL	1	T6481A1-9T-50
8	CONTACT PIN	NOTE 1	NOTE 5	1	B1181A1-8-21/06
7	WASHER	NOTE 2	NOTE 3	1	WS-128/9X08
6	SPRING	SK5	NOTE 4	1	B50000-6
5	RETAINER RING	NOTE 1	NOTE 3	1	B50000-5
4	GASKET	RUBBER	RED	1	GS-115/8X15
3	INSULATOR	NOTE 6	NATURAL	1	B1181A1-3T-50
2	BODY	NOTE 1	NOTE 3	1	B1181A1-2-32/224
1	SHELL	NOTE 1	NOTE 3	1	B50000-1-B

DIMENSIONS ARE IN MILLIMETERS

UNLESS OTHERWISE SPECIFIED TOLERANCES
0.5-6 = ±0.2
6-30 = ±0.4
30-120 = ±0.6
120-315 = ±1
315-1000 = ±1 6
1000-2000 = ±2 4

SCALE 3/1 ISSUE A

PART NO. B1181A1-NT3G-11-50

APPROVED DATE 10-11-01'

CHECKED DATE 10-11-01'

DRAWN DATE 10-11-01'

FILE NO.

Amphenol

TITLE BNC DIRECT SOLDER PLUG (FOR .085", .086" CABLE)

DRAWING NO. KJ-B1181A1-NT3G-.085-50

ITEM NO.