REVISIONS		
ISS	ZONE	DESCRIPTION\PER REQUEST\DATE

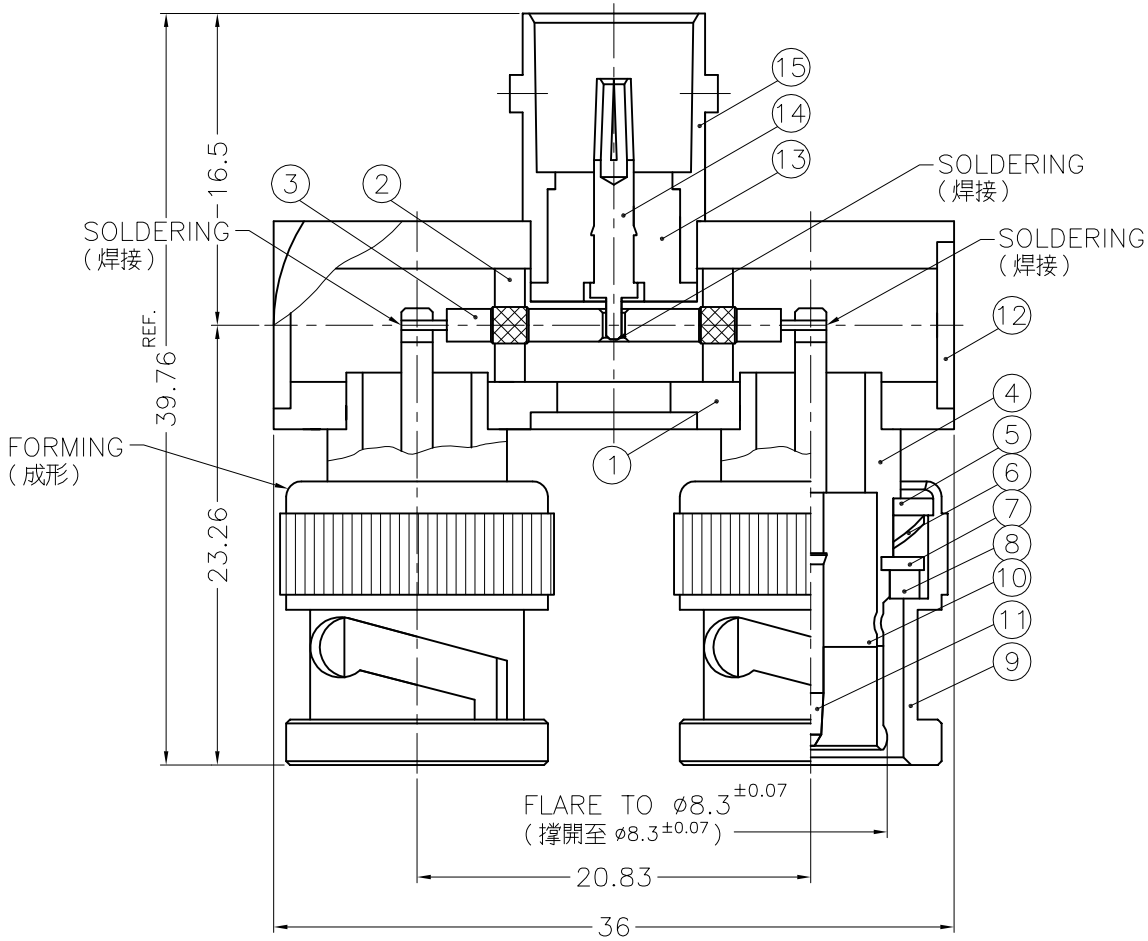

NOTES: FINISH (PLATING THICKNESS IN MICRO-INCHES)
1. BRASS PER QQ-B-626
2. BRASS PER QQ-B-613
3. PHOSPHOR BRONZE PER QQ-B-750
4. NICKEL PL. 100 MIN. THICK OVER COPPER STRIKE
5. NICKEL PL. 200 MIN. THICK OVER COPPER STRIKE
6. GOLD PL. 10 MIN. THICK OVER NICKEL PL. 100 MIN. THICK OVER COPPER STRIKE
7. TEFLON MIL-P-19468

NO.	DESCRIPTION	MATERIAL	FINISH	Q'TY	DRAWING NO.
15	BODY	NOTE 1	NOTE 4	1	B9073A1-3
14	CONTACT PIN	NOTE 3	NOTE 6	1	B8077A1-8
13	INSULATOR	NOTE 7	NATURAL	1	B4077A1-13
12	COVER	NOTE 2	NOTE 4	3	CV-895X07-T
11	CONTACT PIN	NOTE 1	NOTE 6	2	B4077A1-11
10	INSULATOR	NOTE 7	NATURAL	2	B1112A6-4T-75
9	SHELL	NOTE 1	NOTE 4	2	B50000-1-B
8	GASKET	RUBBER	RED	2	GS-115/8X15
7	RETAINER RING	NOTE 1	NOTE 4	2	B50000-5
6	SPRING	SK5	NOTE 5	2	B50000-6
5	WASHER	NOTE 2	NOTE 4	2	WS-128/9X08
4	BODY	NOTE 1	NOTE 4	2	B4077A1-4
3	CONTACT PIN	NOTE 1	NOTE 6	1	B4077A1-3
2	INSULATOR	NOTE 7	NATURAL	2	B4077A1-2
1	HOUSING	NOTE 1	NOTE 4	1	B4077A1-1

DIMENSIONS ARE IN MILLIMETERS

UNLESS OTHERWISE SPECIFIED TOLERANCES
0.5-6 = ±0.2
6-30 = ±0.4
30-120 = ±0.6
120-315 = ±1
315-1000 = ±1.6
1000-2000 = ±2.4

SCALE 2.5/1 | ISSUE 1

PART NO.

APPROVED | DATE 02-23-01'

CHECKED | DATE 02-23-01'

DRAWN LILY | DATE 02-23-01'

Amphenol - Kai Jack
TAINAN TAIWAN

TITLE
BNC JACK ADAPTOR

DRAWING NO.
KJ-B4077A1-NT10G-75

FILE NO. F:\DWG\B\4077A1\75\NT10G