REVISIONS		
ISS	ZONE	DESCRIPTION\PER REQUEST\DATE
A1	B-4	ADDED KEY CODING\N/A\12-27-01'
A2	B-6	CANCELLED L AND M KEY CODING\N/A\02-13-03'

REMARK: 1. NO.2 MUST WITHSTAND A 4 lbs. MIN. PUSHOUT FORCE FROM NO.1 AFTER STAKING OPERATION
2. REMARK 1 IS MAINTAINED BY STAMPING THE FOUR POINTS SHOWN ON THE DRAWING WITHOUT PUNCTURING NO.1
(1. 打四點後零件2由零件1 推出至少必須承受4磅推力)
(2. 打四點後除需符合備註1 要求外 且不可擊穿零件1)

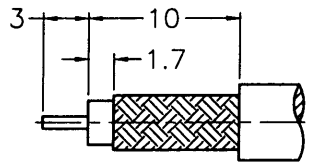

RECOMMENDED CABLE STRIPPING DIM'S
(建議剝線尺寸)

1. CRIMPED FERRULE HEX CRIMP SIZE .213"
2. CRIMPED CONTACT PIN SQ. CRIMP SIZE .042"

SALES

STAKE IN 4 PLACES EQUALLY SPACED 90° APART
(打四點 間隔 90°)
(SEE REMARK 1,2)

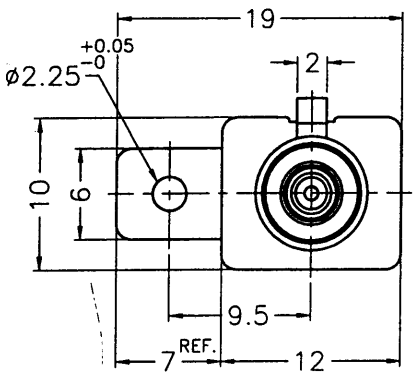

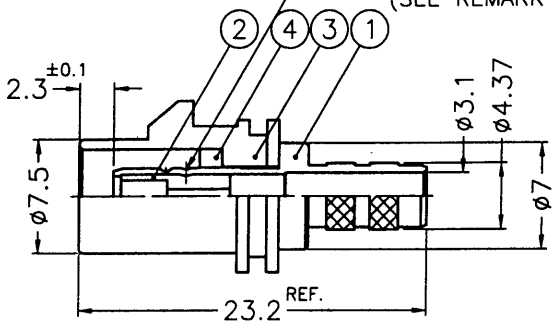

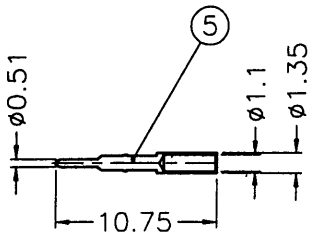

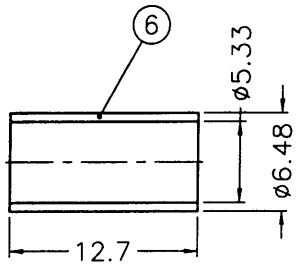

ISSUED
2003. 2. 14
R & D

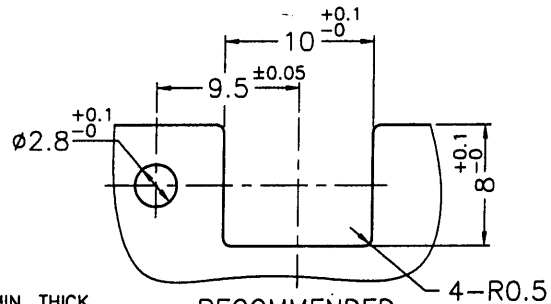

RECOMMENDED MOUNTING HOLE
(建議架設孔)

NOTES: FINISH (PLATING THICKNESS IN MICRO-INCHES)
1. BRASS PER QQ-B-626, ALLOY 360, 1/2 H ; JIS H3250 C 3604BD OR EQUIVALENT
2. NICKEL PL. 60 MIN. THICK OVER COPPER STRIKE
3. GOLD PL. 30 MIN. THICK OVER NICKEL PL. 100 MIN. THICK OVER COPPER STRIKE
4. TEFLON MIL-P-19468 OR EQUIVALENT
5. COPPER PER ASTM B-75 ALLOY C12200 OR EQUIVALENT
6. PBT(WITH 15% GLASS FIBER) PER CHANG CHUN GRADE 4115202 OR EQUIVALENT

TABLE

KEY CODING	PART NO.	DRAWING NO.	ITEM NO.	LOCK COVER
A	FA1-NASP-C04-0	FK1321AW-008-NT30G-50	FK1321AAA57NC5F	FKLC10201A
B	FA1-NBSP-C04-0	FK1321BW-008-NT30G-50	FK1321AAB57NC5F	FKLC10202A
C	FA1-NCSP-C04-0	FK1321CW-008-NT30G-50	FK1321AAC57NC5F	FKLC10203A
D	FA1-NDSP-C04-0	FK1321DW-008-NT30G-50	FK1321AAD57NC5F	FKLC10204A
E	FA1-NESP-C04-0	FK1321EW-008-NT30G-50	FK1321AAE57NC5F	FKLC10205A
F	FA1-NFSP-C04-0	FK1321FW-008-NT30G-50	FK1321AAF57NC5F	FKLC10206A
G	FA1-NGSP-C04-0	FK1321GW-008-NT30G-50	FK1321AAG57NC5F	FKLC10207A
H	FA1-NHSP-C04-0	FK1321HW-008-NT30G-50	FK1321AAH57NC5F	FKLC10208A
I	FA1-NISP-C04-0	FK1321IW-008-NT30G-50	FK1321AAI57NC5F	FKLC10209A
K	FA1-NKSP-C04-0	FK1321KW-008-NT30G-50	FK1321AAK57NC5F	FKLC10210A
Z	FA1-NZSP-C04-0	FK1321ZW-008-NT30G-50	FK1321AAZ57NC5F	FKLC10211A

NO.	DESCRIPTION	MATERIAL	FINISH	Q'TY	DRAWING NO.
6	FERRULE	NOTE 5	NOTE 2	1	FKFR00201A
5	CONTACT PIN	NOTE 1	NOTE 3	1	FKCP00301A
4	RING	NOTE 1	NOTE 2	1	FKLR00101A
3	LOCK COVER	NOTE 6		1	SEE TABLE
2	INSULATOR	NOTE 4	NATURAL	1	FKNS00401A
1	MAIN BODY	NOTE 1	NOTE 2	1	FKMB00201A

DIMENSIONS ARE IN MILLIMETERS
UNLESS OTHERWISE SPECIFIED TOLERANCES
0.5-6 = ±0.2
6-30 = ±0.4
30-120 = ±0.6
120-315 = ±1
315-1000 = ±1.6
1000-2000 = ±2.4

SCALE 2/1 | ISSUE A2

PART NO. FA1-NXSP-C04-0
APPROVED Cosel. W DATE 02-13-03'
CHECKED Cosel. W DATE 02-13-03'
DRAWN DATE 02-13-03'
FILE NO. F:\DWG\FK\1321XX\008\50\NT30G-A2

Amphenol
Danbury,CT,USA-Tainan,Taiwan-Shenzhen,China

TITLE FAKRA SMB CRIMP PLUG (FOR RG-58A/U, 58C/U CABLE)

DRAWING NO. FK1321XX-008-NT30G-50

ITEM NO. FK1321AAX57NC5F

RD-DR 17097