REVISIONS		
ISS	ZONE	DESCRIPTION\PER REQUEST\DATE

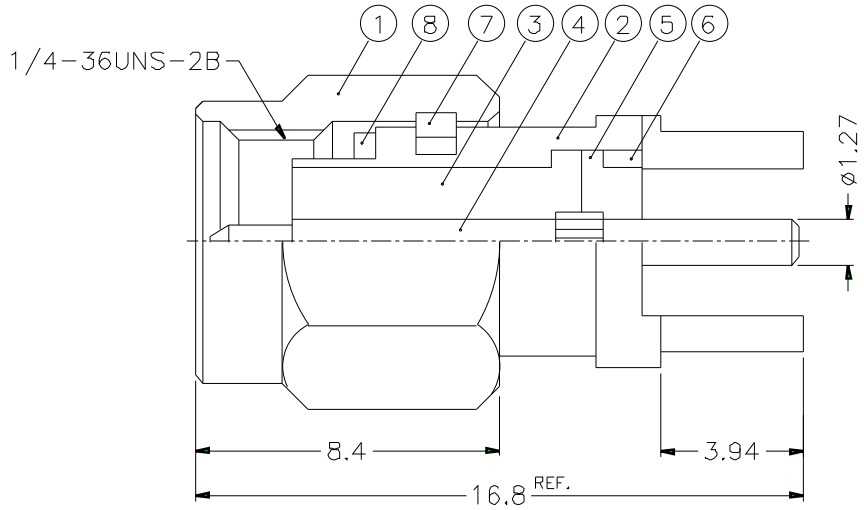

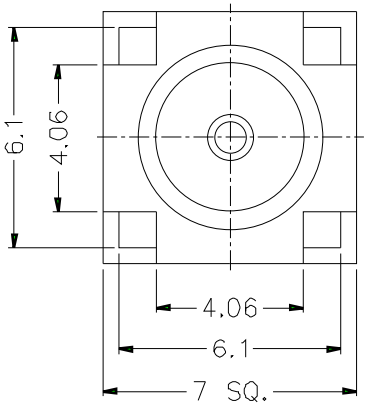

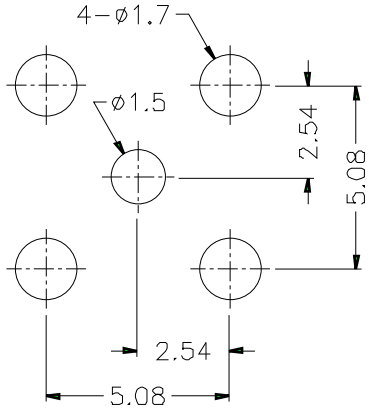

PCB MOUNTING HOLE

NOTES: FINISH (PLATING THICKNESS IN MICRO-INCHES)
1. BRASS PER QQ-B-626
2. GOLD PL. 3 MIN. THICK OVER NICKEL PL. 100 MIN. THICK OVER COPPER STRIKE
3. BERYLLIUM COPPER PER QQ-C-530
4. GOLD PL. 50 MIN. THICK OVER NICKEL PL. 100 MIN. THICK OVER COPPER STRIKE
5. TEFLON MIL-P-19468

NO.	DESCRIPTION	MATERIAL	FINISH	Q'TY	DRAWING NO.
8	GASKET	SILICONE	RED	1	GS-6/43X06
7	RETAINER RING	NOTE 3	NATURAL	1	SMA5000-4-B
6	RING	NOTE 1	NOTE 2	1	SMA7700-5-B
5	INSULATOR	NOTE 5	NATURAL	1	SMA7700-4T-50
4	CONTACT PIN	NOTE 1	NOTE 4	1	SMA1251A1-4-A
3	INSULATOR	NOTE 5	NATURAL	1	SMA5530-3T-50-B
2	BODY	NOTE 1	NOTE 2	1	SMA1251A1-2-B
1	SHELL	NOTE 1	NOTE 2	1	SMA5000-1-C

DIMENSIONS ARE IN MILLIMETERS

UNLESS OTHERWISE SPECIFIED TOLERANCES
0.5-6 = ±0.2
6-30 = ±0.4
30-120 = ±0.6
120-315 = ±1
315-1000 = ±1.6
1000-2000 = ±2.4

SCALE 5/1 ISSUE A

PART NO. SMA1251A1-3GT50G-50

APPROVED DATE 10-11-01'

CHECKED DATE 10-11-01'

DRAWN DATE 10-11-01'

FILE NO

Amphenol

TITLE
SMA P.C. MOUNT PLUG

DRAWING NO.
KJ-SMA1251A1-3GT50G-50

ITEM NO.