REVISIONS			
ISS	ZONE	DESCRIPTION PER REQUEST	DATE

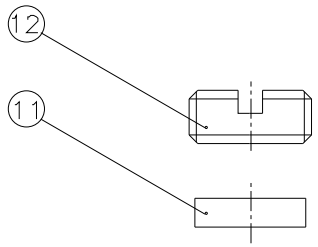

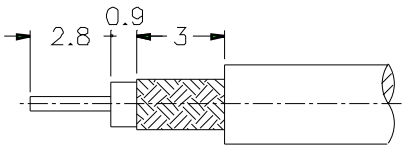

RECOMMENDED
CABLE STRIPPING DIM'S

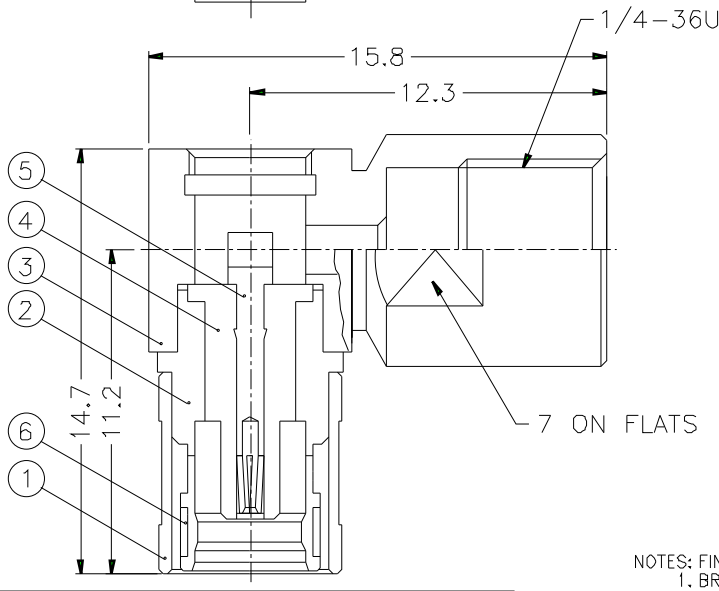

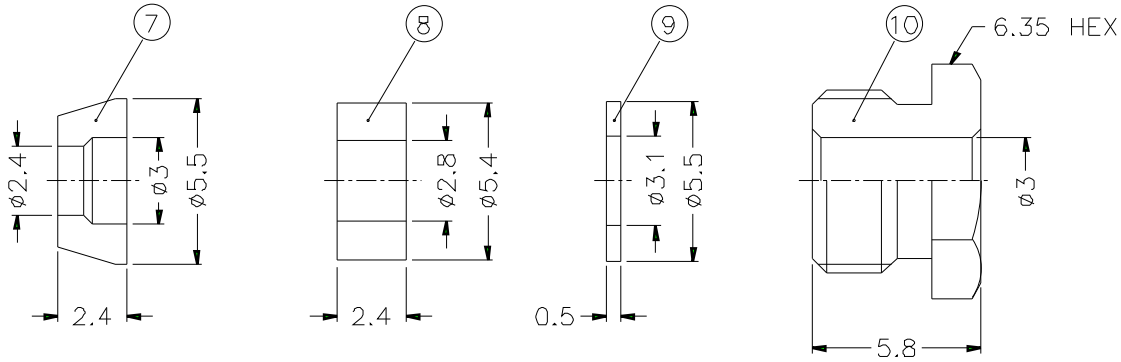

NOTES: FINISH (PLATING THICKNESS IN MICRO-INCHES)
1. BRASS PER QQ-B-626
2. BRASS PER QQ-B-613
3. GOLD PL. 3 MIN. THICK OVER NICKEL PL. 100 MIN. THICK OVER COPPER STRIKE
4. BERYLLIUM COPPER PER QQ-C-530
5. GOLD PL. 30 MIN. THICK OVER NICKEL PL. 100 MIN. THICK OVER COPPER STRIKE
6. TEFLON MIL-P-19468

1. CONTACT PIN TO SOLDER

NO.	DESCRIPTION	MATERIAL	FINISH	Q'TY	DRAWING NO.
12	NUT	NOTE 1	NOTE 3	1	SMA1112A3-8-B
11	INSULATOR	PE	NATURAL	1	SMB5090-7
10	HEX NUT	NOTE 1	NOTE 3	1	SMA5200-11-635/3
9	WASHER	NOTE 2	NOTE 3	1	WS-55/31X05
8	GASKET	SILICONE	RED	1	GS-54/28X24
7	TOP HAT	NOTE 1	NOTE 3	1	SMA1141C1-8-3/24-B
6	RETAINER RING	NOTE 4	NATURAL	1	SMB5000-6
5	CONTACT PIN	NOTE 4	NOTE 5	1	SMB5090-5-B
4	INSULATOR	NOTE 6	NATURAL	1	SMB5090-4T-50
3	HOUSING	NOTE 1	NOTE 3	1	SMB6142C1-3
2	BODY	NOTE 1	NOTE 3	1	SMB5090-2-A
1	SHELL	NOTE 1	NOTE 3	1	SMB5000-1

DIMENSIONS ARE IN MILLIMETERS

UNLESS OTHERWISE SPECIFIED TOLERANCES
0.5-6 = ±0.2
6-30 = ±0.4
30-120 = ±0.6
120-315 = ±1
315-1000 = ±1.6
1000-2000 = ±2.4

SCALE 4/1 | ISSUE A

PART NO. SMB6142C1-3GT30G-5-50

APPROVED DATE 10-11-01'

CHECKED DATE 10-11-01'

DRAWN DATE 10-11-01'

FILE NO

Amphenol

TITLE SMB R/A CLAMP PLUG (FOR RG-174/U,188A/U,316/U)

DRAWING NO. KJ-SMB6142C1-3GT30G-316U-50

ITEM NO.