REVISIONS		
ISS	ZONE	DESCRIPTION\PER REQUEST\DATE

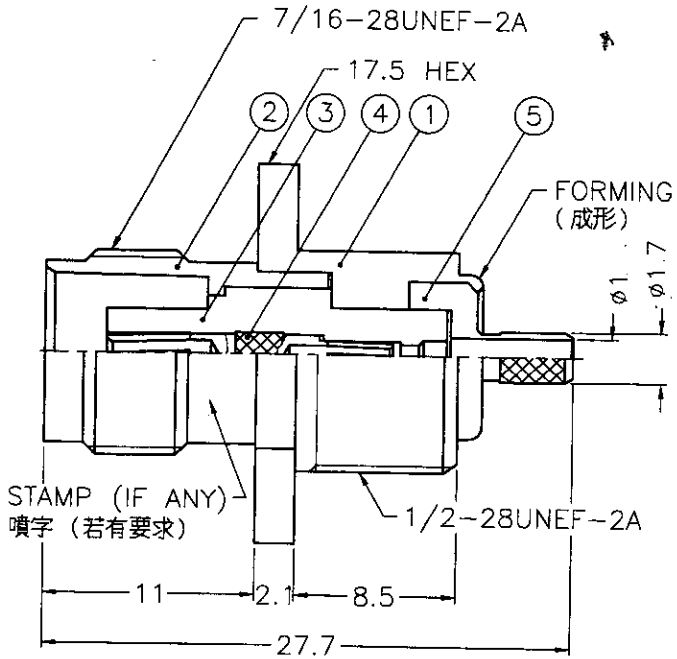

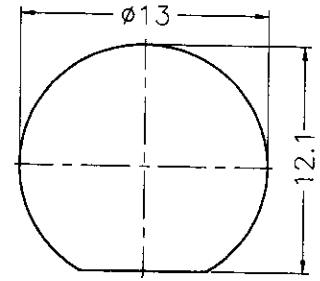

RECOMMENDED
MOUNTING HOLE
（建議架設孔）

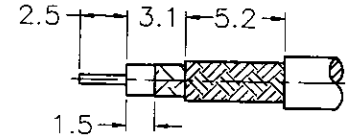

RECOMMENDED
CABLE STRIPPING DIM'S
（建議剝線尺寸）

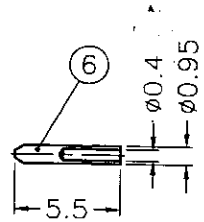

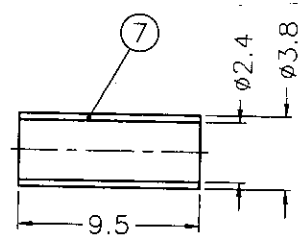

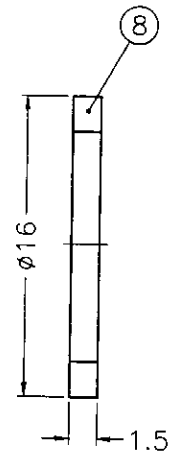

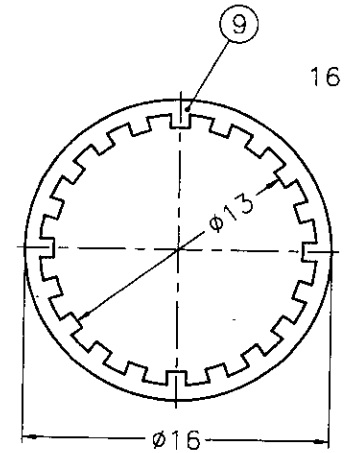

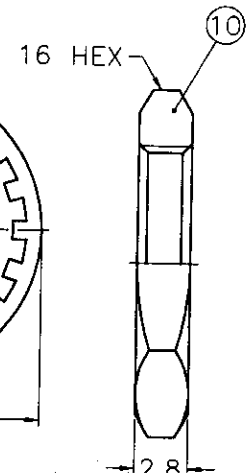

NOTES: FINISH (PLATING THICKNESS IN MICRO-INCHES)
1. BRASS PER QQ-B-626
2. BRASS PER QQ-B-613
3. NICKEL PL. 100 MIN. THICK OVER COPPER STRIKE
4. PHOSPHOR BRONZE PER QQ-B-750
5. GOLD PL. 3 MIN. THICK OVER NICKEL PL. 100 MIN. THICK OVER COPPER STRIKE
6. JIS H3250, C 2600

NO.	DESCRIPTION	MATERIAL	FINISH	Q'TY	DRAWING NO.
10	HEX NUT	NOTE 1	NOTE 3	1	HN16-1/2-28X28
9	LOCK WASHER	NOTE 2	NOTE 3	1	LW-16/13X05
8	GASKET	RUBBER	RED	1	GS-16/122X15
7	FERRULE	NOTE 6	NOTE 3	1	FR-
6	CONTACT PIN	NOTE 1	NOTE 5	1	B50003-9-
5	BARREL	NOTE 1	NOTE 3	1	BR00ALA02A
4	CONTACT PIN	NOTE 4	NOTE 5	1	B6421G1-4-1.05
3	INSULATOR	DELRIN	NATURAL	1	B6421G1-3-50-B
2	BODY	NOTE 1	NOTE 3	1	T74000-2
1	HOUSING	NOTE 1	NOTE 3	1	HS00AKM01A

DIMENSIONS ARE IN MILLIMETERS

UNLESS OTHERWISE SPECIFIED TOLERANCES
0.5-6 = ±0.2
6-30 = ±0.4
30-120 = ±0.6
120-315 = ±1
315-1000 = ±1.6
1000-2000 = ±2.4

SCALE	2.5/1	ISSUE	A1

PART NO.

APPROVED — DATE 06-07-02'

CHECKED — DATE 06-07-02'

DRAWN KARL — DATE 06-07-02'

FILE NO. F:\DWG\T\6321G1\001\50\ND3G

Amphenol - Kai Jack
TAINAN TAIWAN

TITLE
TNC BULKHEAD CRIMP JACK (Sam 178U Cable)

DRAWING NO.
KJ-T6321G1-ND3G-196AU-50

ITEM NO.