NOTES:

1. MATERIALS AND FINISHES:
   BODY - BRASS, ALBALOY PLATING
   CONTACT - PHOSPHOR BRONZE, GOLD PLATING
   INSULATORS - PTFE
   GASKET / O-RING - NBR/EPDM

2. ELECTRICAL:
   A. IMPEDANCE: 50 OHM
   B. FREQUENCY RANGE: S67163: DC - 5 GHz; LMR-240: DC - 2.2 GHz
   C. VSWR: S67163: 1.15 + .01 x F(GHz); LMR-240: 1.2 MAX
   D. DIELECTRIC WITHSTANDING VOLTAGE: 1000 VRMS, MIN.

3. MECHANICAL:
   A. DURABILITY: 100 CYCLES MIN.
   B. TEMPERATURE RANGE: -55° C TO 85° C
   C. INTERFACE & RETENTION PER 349-50692

4. ASSEMBLY INSTRUCTIONS (INCLUDED IN EACH PACKAGE):
   A. TRIM CABLE AS SHOWN
   B. CHAMFER CENTER CONDUCTOR OF THE CABLE AS SHOWN
   C. INSERT CABLE INTO CONNECTOR UNTIL IT BOTTOMS, WITH FOIL ENTERING CONNECTOR AND BRAID OVER KNURL
   D. CRIMP FERRULE OVER BRAID W/ .255 HEX
   E. APPLY HEAT SHRINK TUBING OVER FERRULE

THIRD ANGLE PROJ.

REVISIONS				
REV	DESCRIPTION	DATE	ECO	APPR
A	RELEASE TO MFG	22-Nov-11		JS

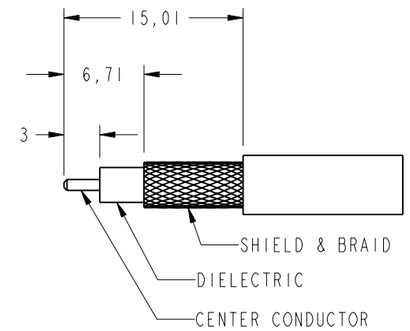

RECOMMENDED CABLE STRIPPING DIMENSIONS

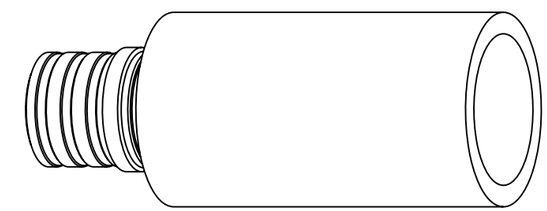

SCALE 2.000

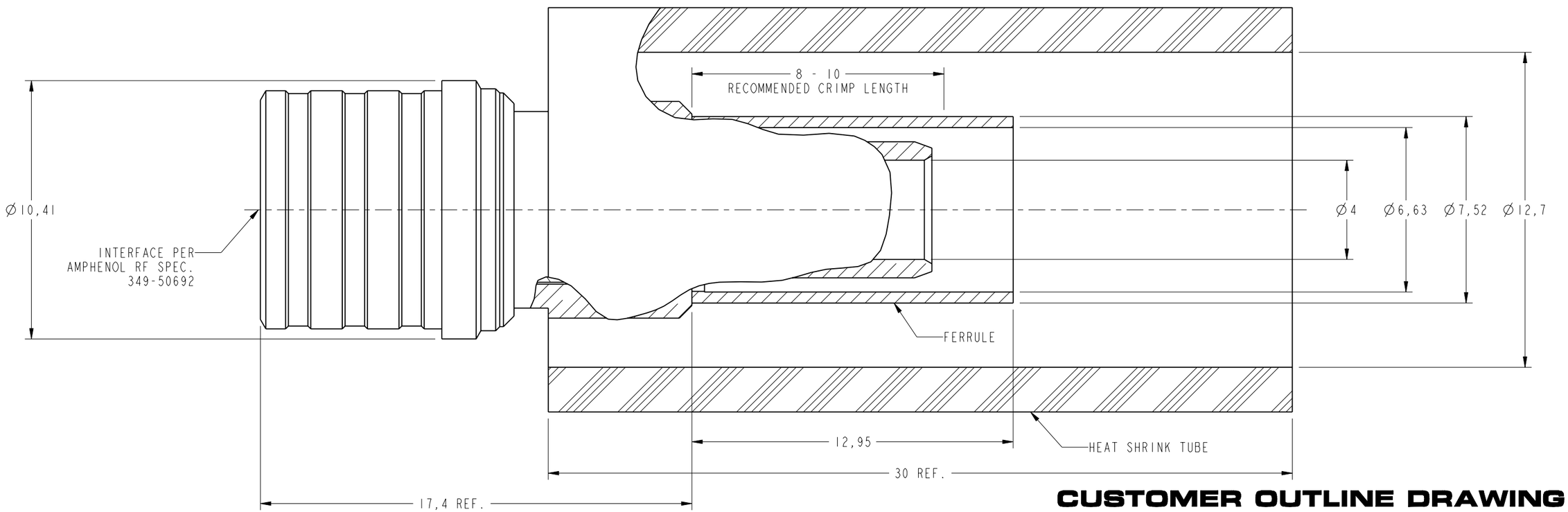

CUSTOMER OUTLINE DRAWING

ALL OTHER SHEETS ARE FOR INTERNAL USE ONLY

UNLESS OTHERWISE SPECIFIED, DIMENSIONS ARE IN METRIC AND TOLERANCES ARE:

0.5 - 6mm	6 - 30mm	30 - 120mm	ANGLES
±0.1mm	±0.2mm	± 0.3mm	±1°

NOTICE - These drawings, specifications, or other data (1) are, and remain the property of Amphenol corp. (2) must be returned upon requiest; and (3) arre confidential and not to be disclosed to any person other than those to whom they are given by Amphenol Corp. the funishing of these drawings, specifications, or other data by Amphenol Corp., or to any other person to anyone for any purpose is not to be regarded by implicatioin or otherwise in any manner licensing, granting rights to permitting such holder or any other sperson to manufacture, use or sell any product, process or design, patented or otherwsie, that may in any way be related to or disclosed by said drawings, specifications, or other data.

MATERIAL

REFERENCE
EAR# 4618

CONFIGURATION LEVEL:

FINISH

DRAWN J.SHAO	DATE 22-Nov-11	
ENGINEER F.WANG	DATE 22-Nov-11	
APPROVED D.HU	DATE 22-Nov-11	
CAD FILE I:\QMA\QMA1111A1-AT30GA-LMR240-50		

TITLE
QMA (M) STRIAGHT CRIMP PLUG, IP67 TO S67163, LMR-240

SCALE: 6.0:1.0	SHEET 2 OF 2	
DWG SIZE B	CODE ID 74868	REV A

Amphenol RF
Danbury CT USA, Tainan, Taiwan, Shenzhen, China
www.amphenolrf.com

DRAWING NO. QMA1111A1-AT30GA-LMR240-50

ITEM NO. 701111AADA1AG5F

PART NO.