NOTES:
1. MATERIAL AND FINISH (PLATING THICKNESS IN MICRO-INCHES):
   BODY - BERYLLIUM COPPER, GOLD PLATING
   CONTACT - BERYLLIUM COPPER, GOLD PLATING
   INSULATOR - PTFE, NATURAL
2. ELECTRICAL:
   A. IMPEDANCE:50 OHM
   B. FREQUENCY:DC-1 GHZ
   C. VEWR(RETURN LOSS):1.5 MAX
   D. DIELECTRIC WITHSTANDING VOLTAGE:500 VRMS. MIN.
3. MECHANICAL:
   A. DURABILITY:500 CYCLES MIN.
   B. TEMPERATURE RANGE:-40°C TO +155°C
4. CRIMPED FERRULE
   HEX CRIMP SIZE .128"
5. CONTACT PIN TO SOLDER

THIRD ANGLE PROJ.

REVISIONS

REV	DESCRIPTION	DATE	ECO	APPR
1	PRELIMINARY RELEASE	28-Dec-09		ML
2	SEE SHEET 1	06-Agu-11		JS
3	SEE SHEET 1	06-Sep-11		JS

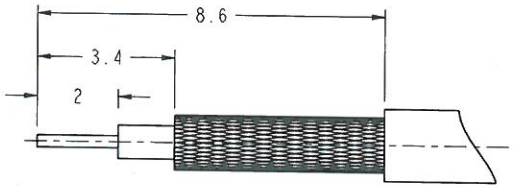

RECOMMENDED
CABLE STRIPPING DIM'S

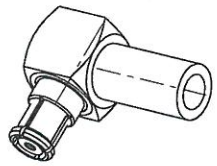

SCALE 3.000

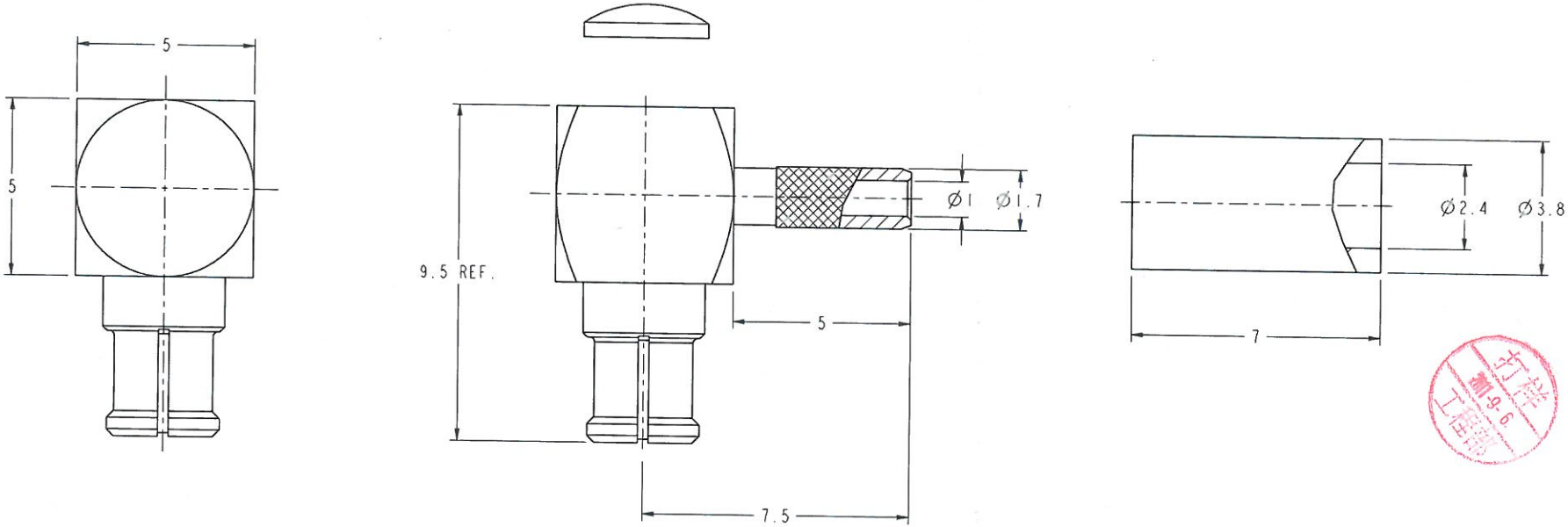

CUSTOMER OUTLINE DRAWING
ALL OTHER SHEETS ARE FOR INTERNAL USE ONLY

UNLESS OTHERWISE SPECIFIED, DIMENSIONS ARE IN METRIC AND TOLERANCES ARE:

0.5 - 6mm	6 - 30mm	30 - 120mm	ANGLES
±0.1mm	±0.2mm	± 0.3mm	±1°

NOTICE - These drawings, specifications, or other data (1) are, and remain the property of Amphenol corp. (2) must be returned upon requiest; and (3) arre confidential and not to be disclosed to any person other than those to whom they are given by Amphenol Corp. the furnishing of these drawings, specifications, or other data by Amphenol Corp., or to any other person to anyone for any purpose is not to be regarded by implicatioin or otherwise in any manner licensing, granting rights to permitting such holder or any other sperson to manufacture, use or sell any product, process or design, patented or otherwsie, that may in any way be related to or disclosed by said drawings, specifications, or other data.

MATERIAL

REFERENCE

FINISH

DRAWN JIM — DATE 06-Sep-11
ENGINEER Fujo — DATE 06-Sep-11
APPROVED Daniel — DATE 06-Sep-11
CAD FILE I:\SMP\SMP6112C1-001-3GT30G-50

TITLE
SMP RIGHT ANGLE JACK
(FOR RG-178B/U, 196AU)

SCALE: 8.0:1.0 | SHEET 2 OF 2
DWG SIZE B | CODE ID 74868 | REV 3

Amphenol RF
Danbury CT USA, Tainan, Taiwan, Shenzhen, China
www.amphenolrf.com

DRAWING NO. SMP6112C1-001-3GT30G-50
ITEM NO. 376112AAD16GE5F
PART NO.